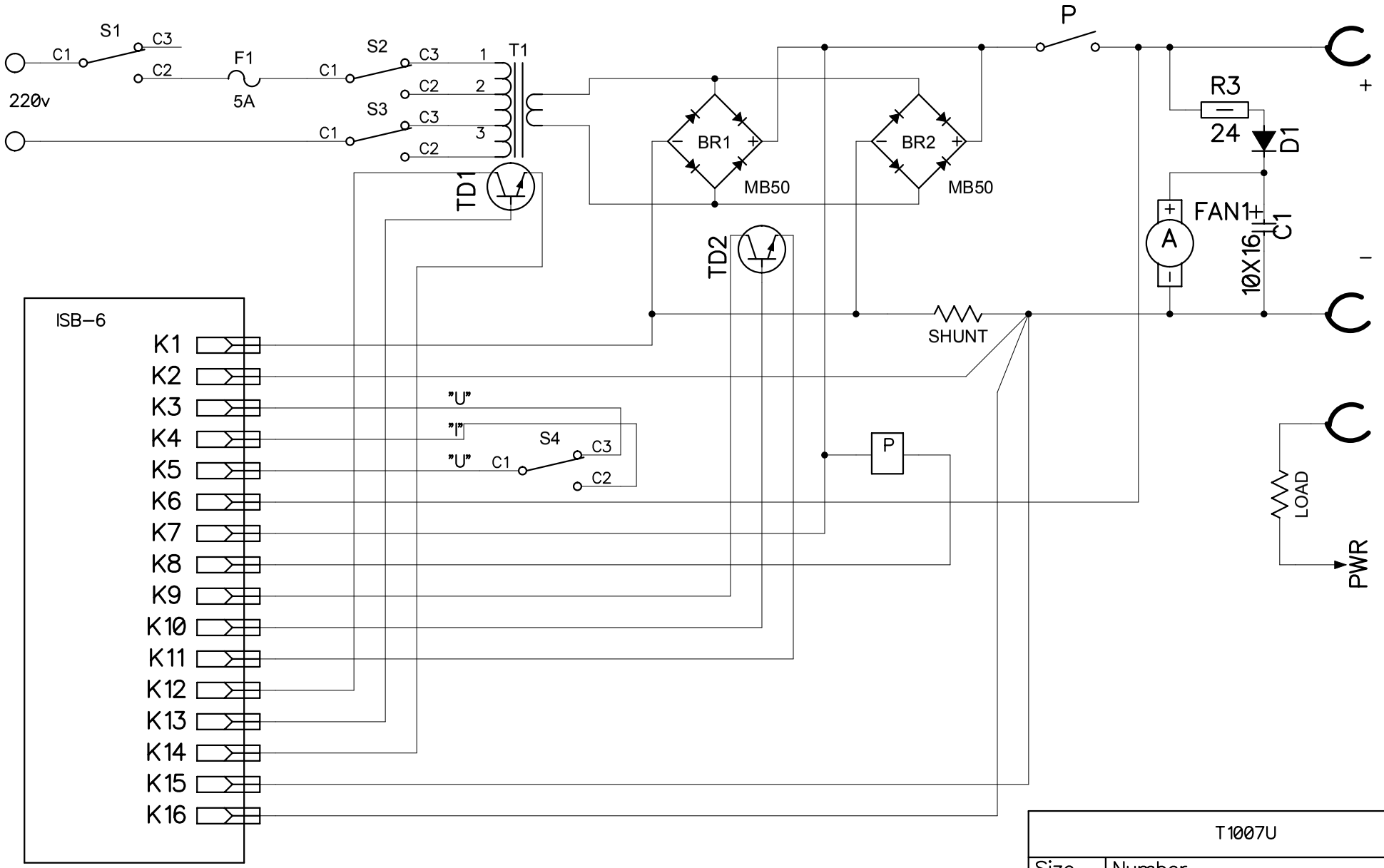


| | | |
|---|---|---|
| T1007U | | |
| Size A4 | Number AAB-00-07PE3 | Rev |
| Date Thu Dec 08, 2005 | | Drawn by Lyzhin |
| Filename T1007U_new.sch | | Sheet of |